AFRIT

STEPDECK SEMI TRAILER

14.95M TRIDEM AXLE STEPDECK SEMI TRAILER

BUILT FOR MORE

AFRIT

STEPDECK SEMI TRAILER

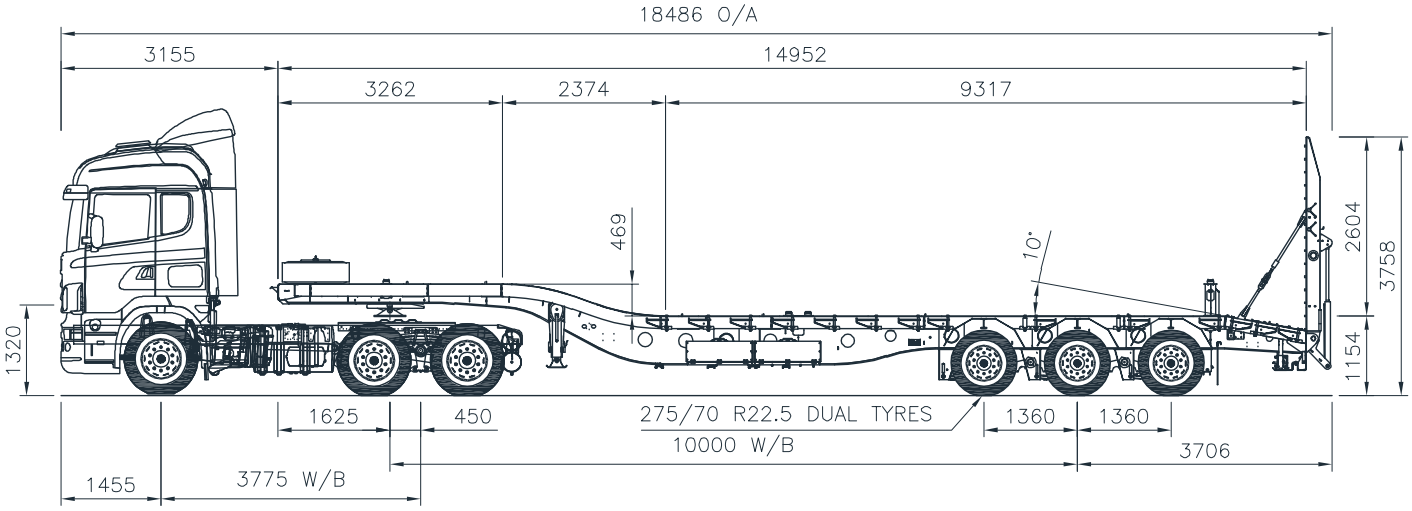

WEIGHT	
Tare	9460kg
Payload	32 000kg
GCM	49 500kg
DIMENSIONS	
Length	14 952mm
Width	2600mm
Height	1154mm
SPECIFICATIONS	
Wheels	275/70R22.5
Rims	8.25 x 22.5 Off Set Aluminium
Suspension	AFRIT Mechanical Suspension
Spare Wheel Carrier	Bolt on type
Brakes	Twin Line with ABS - 24 Volt
OTHER	4.5mm Steel deck, Hydraulic operated ramps with power pack, Container locks, Chainrings, Outriggers. *Payloads are based on a truck tare weight of 9500kg.

AFRIT Quality on time

ROSSLYN (HQ)
Tel +27 (0)12 541 2123
7 Phillips Street,
Rosslyn, Pretoria

POMONA
Tel +27 (0)11 892 9200
78 Pomona Road,
Kempton Park

a Bud Group Company
WWW.AFRIT.CO.ZA